Acceptance conditions 12200900057

Company	Name and surname	Signature and stamp	Date
OMFB S.p.A. Hydraulic Components	Alessandro Zoni	O.M.F.B. S.p.A. 27/08/2012 DT.:	27/08/2012
TATRA, a.s. kopřivnice			

REVISIONS:

Rev. n°	Date	Description

Data: Lunedì 27 agosto 2012
Codice foglio:99701400010 Rev.://

O.M.F.B. S.p.A. Hydraulic Components
We reserve the right to make any changes without notice.
Edition 2012.08 No reproduction, however partial, is permitted.

Via Cave, 7/9 25050 Provaglio d'Iseo (Brescia) Italy Tel.: +39.030.9830611
Fax: +39.030.9839207-208 Internet:www.omfb.it e-mail:info@omfb.it

Segnalatore di pressione
Pressure signal switch

CODICE
CODE

12200900057

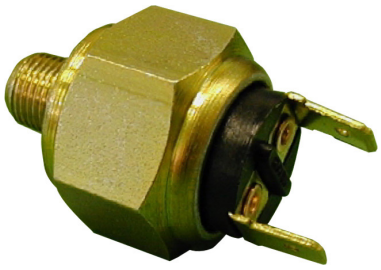

Segnalatore di pressione NA standard

- Taratura fissa a 5/8 bar
- Connessioni faston 6,3x0.8 mm
- Tensione max. 48V-0.5Amp (resist)
- Pressione massima 300 bar
- Temperatura di esercizio -40° / 100° C
- Protezione elettrica IP54 faston esclusi

Standard NO switch

- Fixed setting at 5/8 bar
- Faston connections 6,3x0.8 mm
- Electrichal rating 48V-0.5Amp (resist)
- Max pressure 300 bar
- Enviromental -40° - 100° C
- Electrichal proteciton IP54 fast-on excluded

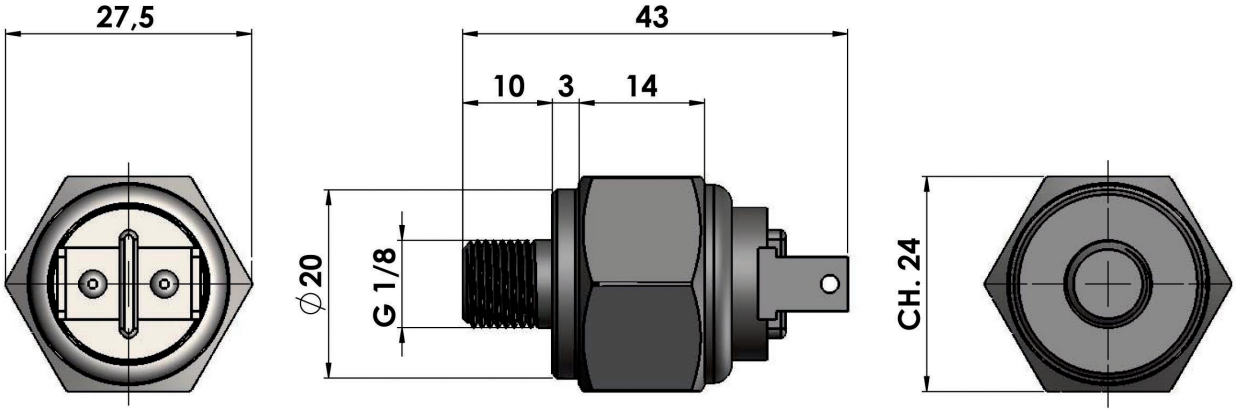

Data: Lunedì 27 agosto 2012

Codice foglio:99701400010 Rev://

O.M.F.B. S.p.A. Hydraulic Components
We reserve the right to make any changes without notice.
Edition 2012.08 No reproduction, however partial, is permitted.
Via Cave, 7/9 25050 Provaglio d'Iseo (Brescia) Italy Tel.: +39.030.9830611
Fax: +39.030.9839207-208 Internet:www.omfb.it e-mail:info@omfb.it